DC POWER CONNECTORS

CH-1019 — 2.1 X 5.5 DC SOCKET PANEL MOUNT

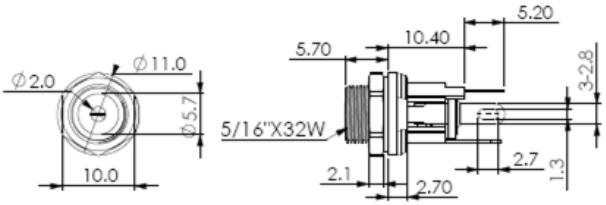

SPECIFICATION :

Contact Resistance :
30mΩ max. (initial)
Insulation Resistance :
100MΩ min. at 500V DC
Voltage Withstand :
500V AC for 1 minute

CH-1019R — 2.1 X 5.5 DC SOCKET PANEL MOUNT DIP TYPE

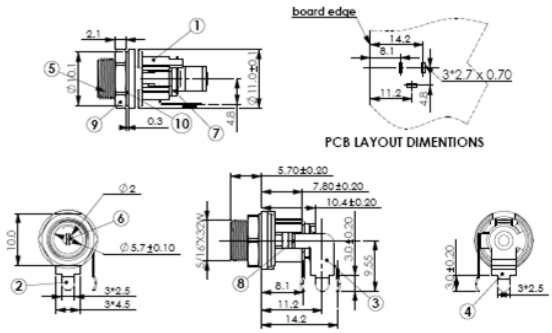

SPECIFICATION :

Contact Resistance :
30mΩ max. (initial)
Insulation Resistance :
100MΩ min. at 500V DC
Voltage Withstand :
500V AC for 1 minute

CH-1020 — 2.5 X 5.5 DC SOCKET PANEL MOUNT

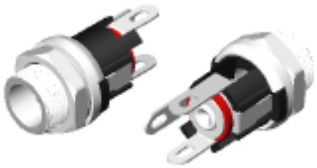

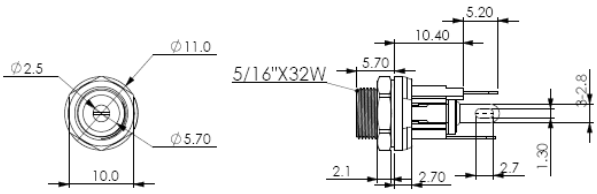

SPECIFICATION :

Contact Resistance :
30mΩ max. (initial)
Insulation Resistance :
100MΩ min. at 500V DC
Voltage Withstand :
500V AC for 1 minute

CH-1020R — 2.5 X 5.5 DC SOCKET PANEL MOUNT DIP TYPE

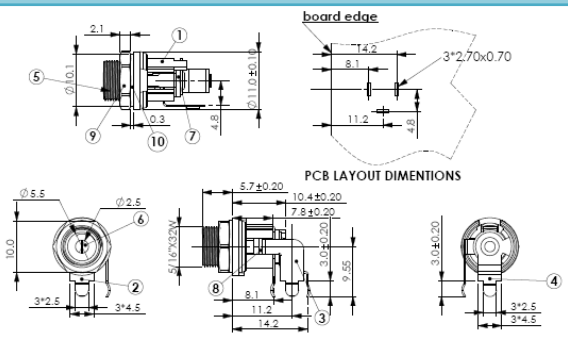

SPECIFICATION :

Contact Resistance :
30mΩ max. (initial)
Insulation Resistance :
100MΩ min. at 500V DC
Voltage Withstand :
500V AC for 1 minute